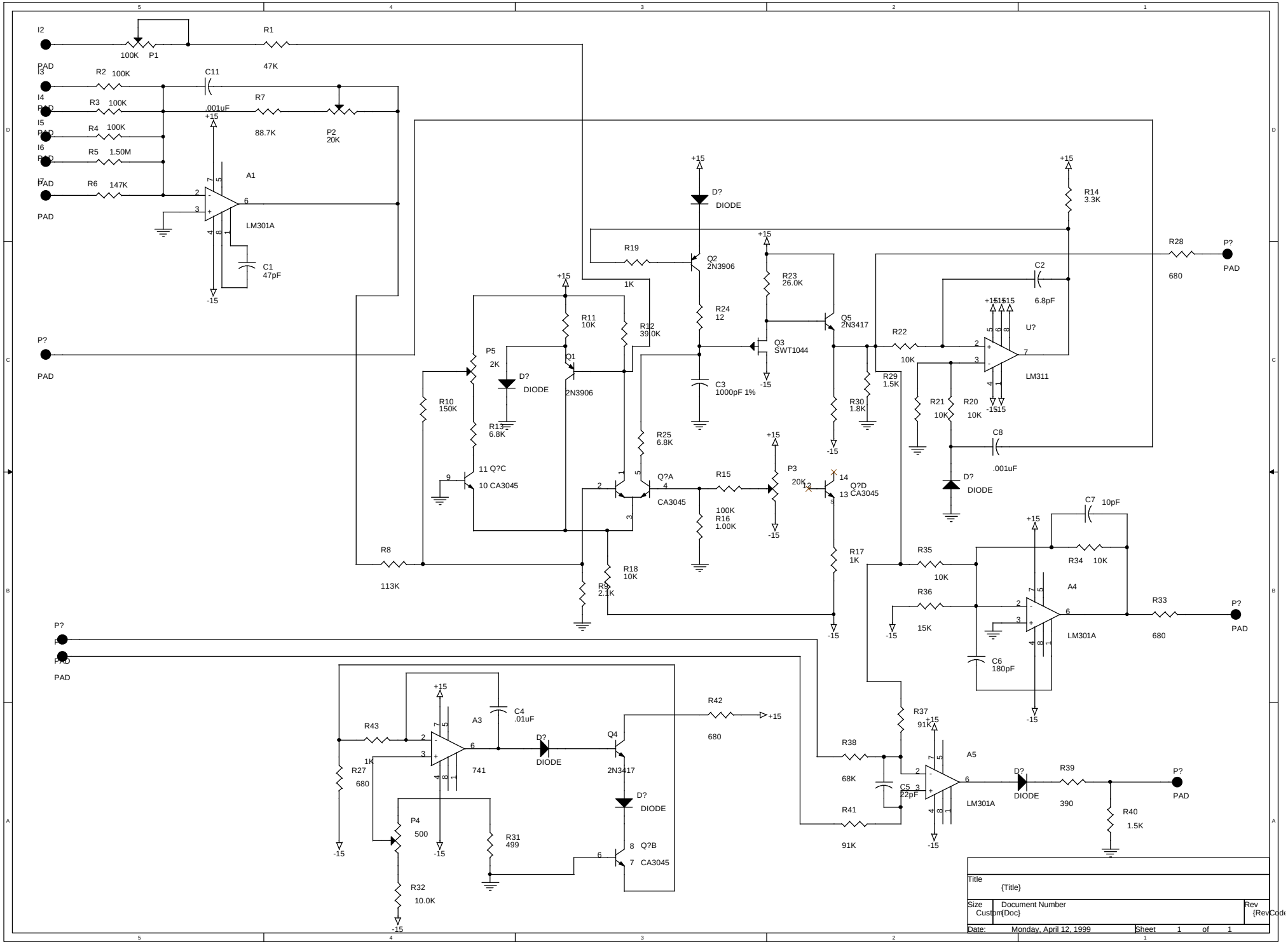
I2
PAD
I3
I4
I5
I6
I7
P?
R1
47K
100K P1
R2 100K
R3 100K
R4 100K
R5 1.50M
R6 147K
C11
.001uF
R7
88.7K
P2
20K
A1
LM301A
C1
47pF
+15
-15
D?
DIODE
R19
1K
Q2
2N3906
R24
12
C3
1000pF 1%
R23
26.0K
Q3
SWT1044
Q5
2N3417
R14
3.3K
R28
680
C2
6.8pF
U?
LM311
R22
10K
R29
1.5K
R30
1.8K
R21
10K
R20
10K
C8
.001uF
R11
10K
R12
390K
Q1
2N3906
P5
2K
R10
150K
R13
6.8K
R25
6.8K
11 Q?C
10 CA3045
Q?A
CA3045
R15
100K
R16
1.00K
P3
20K
Q?D
CA3045
R17
1K
R8
113K
R18
10K
R9
2.1K
R35
10K
R34 10K
C7 10pF
A4
R36
15K
LM301A
R33
680
C6
180pF
R37
91K
R38
68K
C5
22pF
R41
91K
A5
LM301A
R39
390
R40
1.5K
R42
680
R43
1K
R27
680
A3
741
C4
.01uF
Q4
2N3417
P4
500
R31
499
Q?B
CA3045
R32
10.0K
Title
{Title}
Size
Custom
Document Number
{Doc}
Rev
{RevCode
Date: Monday, April 12, 1999
Sheet 1 of 1